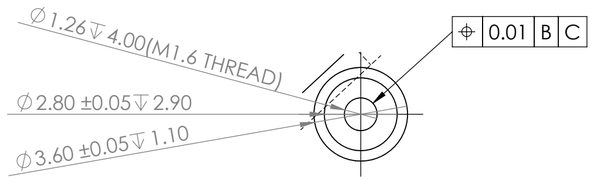

DETAIL B X 2

SCALE 6 : 1

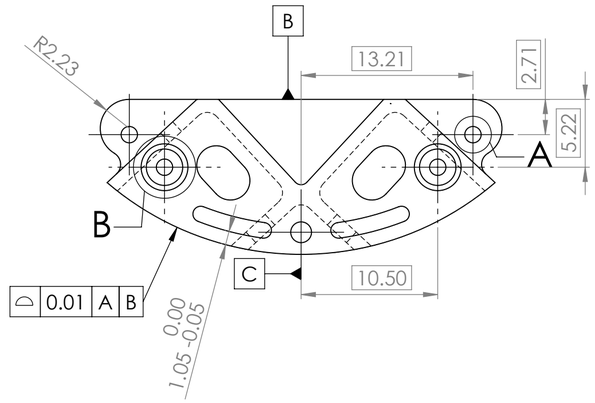

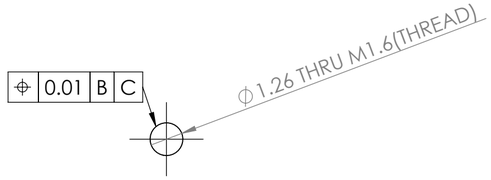

X 2

DETAIL A

SCALE 6 : 1

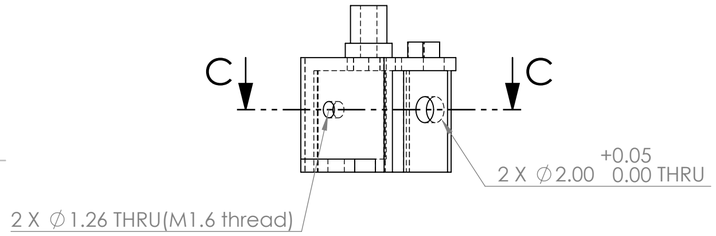

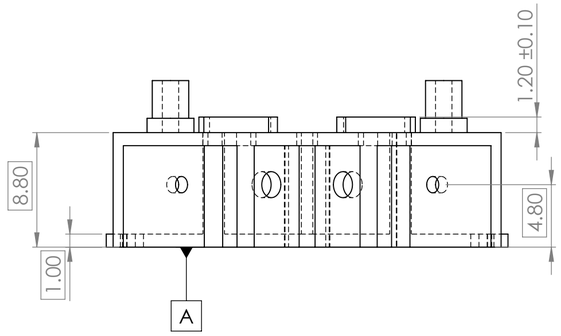

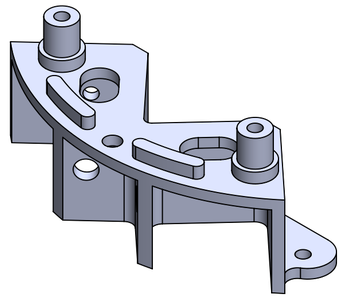

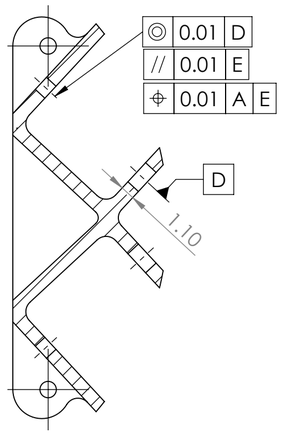

SECTION C-C

SCALE 3 : 1

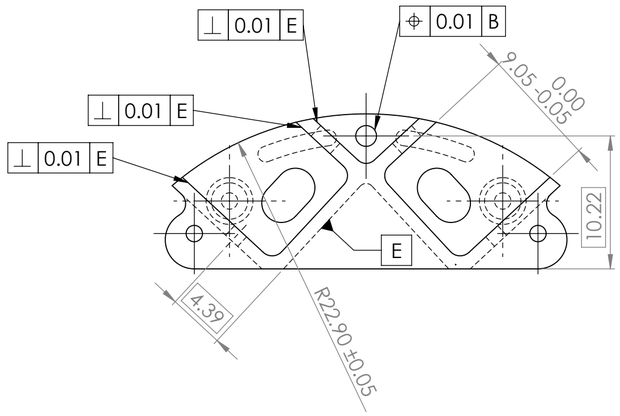

NOTE : All profiles and tolerances are symmetric about datum C

NOTE: Consider a general tolerance of 0.05mm in case where it is not mentioned.

Botlab Dynamics Pvt. Ltd.

TITLE: 2.6.3MNHH_2				
SCALE: 3:1				
PARTICULARS		DATE	MATERIAL:	DWG NO: 01
DRAWN BY	VISHAL SHARMA	08-12-2025	ALUMINUM 6061	
CHK'D BY	ISHWAR MISHRA	08-12-2025	WEIGHT: (gm)	SHEET REVISION : / SHEET 1 OF 1
APPV'D BY	TANMAY BUNKAR	08-12-2025		ALL DIMENSIONS IN MM / A2